EANCOM® 2002 S4

RETINS

Instruction for returns message

Edition 2016 Upd. 2021

1. Introduction 2
2. Message Structure Chart 3
3. Branching Diagram 4
4. Segments Description 9
5. Segments Layout 13
6. Example(s) 60

1. Introduction

Status

MESSAGE TYPE	: RETINS
REFERENCE DIRECTORY	: D.01B
EANCOM® SUBSET VERSION	: 003

Definition

A message by which a party informs another party whether and how goods shall be returned.

Principles

The sender of an instruction for returns message will normally have previously been informed by the recipient of the intention to return goods by means of the Announcement for Returns message.

The instruction for returns message can be used to inform the receiving party on:

- goods being re-called;
- whether the goods shall be returned, repaired, destroyed, or disposed of;
- which transport means and mode shall be used;
- on or by which date the return shall take place;
- which party is responsible for initialising transportation;
- which party is responsible for the transportation costs;
- any additional costs related to the return;
- the carrier who shall carry out the transportation;
- the address to which the returned goods should be sent;
- any associated documents which will be raised in conjunction with the instruction for return, e.g. credit note.
- fixed returns instructions for items which are returned on a scheduled basis, e.g. the collection of unsold newspapers will take place at a fixed time each week.

The instruction for returns may be used to inform a party if the sender refuses, or does not require, return of the goods. Where the message sender does not require the return of goods the message should indicate what action the message recipient should carry out (e.g. disposal, destroy). Where the message sender refuses the return of goods the reason for the refusal should be provided.

2. Message Structure Chart

UNA	1	C	1	- Service string advice
UNB	2	M	1	- Interchange header

Instruction For Returns Heading Section

UNH	3	M	1	- Message header
BGM	4	M	1	- Beginning of message
DTM	5	C	9	- Date/time/period
SG1		C	9	- DOC-DTM
DOC	6	M	1	- Document/message details
DTM	7	C	9	- Date/time/period
SG2		C	9	- RFF-DTM
RFF	8	M	1	- Reference
DTM	9	C	9	- Date/time/period
SG3		C	9	- NAD-LOC-SG4-SG5
NAD	10	M	1	- Name and address
LOC	11	C	9	- Place/location identification
SG4		C	9	- RFF
RFF	12	M	1	- Reference
SG5		C	9	- CTA-COM
CTA	13	M	1	- Contact information
COM	14	C	9	- Communication contact
SG6		C	99	- CDI-DTM-FTX
CDI	15	M	1	- Physical or logical state
DTM	16	C	9	- Date/time/period
FTX	17	C	9	- Free text
SG9		C	9	- TDT
TDT	18	M	1	- Details of transport

Instruction For Returns Detail Section

SG11		M	9999	- LIN-PIA-IMD-MEA-DTM-QTY-LOC-MOA-SG12-SG13-SG16-SG18
LIN	19	M	1	- Line item
PIA	20	C	9	- Additional product id
IMD	21	C	9	- Item description
MEA	22	C	9	- Measurements
DTM	23	C	9	- Date/time/period
QTY	24	C	9	- Quantity
LOC	25	C	9	- Place/location identification
MOA	26	C	9	- Monetary amount
SG12		C	9	- DOC-DTM
DOC	27	M	1	- Document/message details
DTM	28	C	9	- Date/time/period
SG13		C	9	- RFF-DTM
RFF	29	M	1	- Reference
DTM	30	C	9	- Date/time/period
SG16		C	9	- PAC-SG17
PAC	31	M	1	- Package
SG17		C	9	- PCI-DTM-GIN
PCI	32	M	1	- Package identification
DTM	33	C	9	- Date/time/period
GIN	34	C	9	- Goods identity number
SG18		C	99	- CDI-DTM-FTX
CDI	35	M	1	- Physical or logical state
DTM	36	C	9	- Date/time/period
FTX	37	C	9	- Free text

Instruction For Returns Summary Section

CNT	38	C	9	- Control total
UNT	39	M	1	- Message trailer
UNZ	40	M	1	- Interchange trailer

© Copyright GS1

3. Branching Diagram

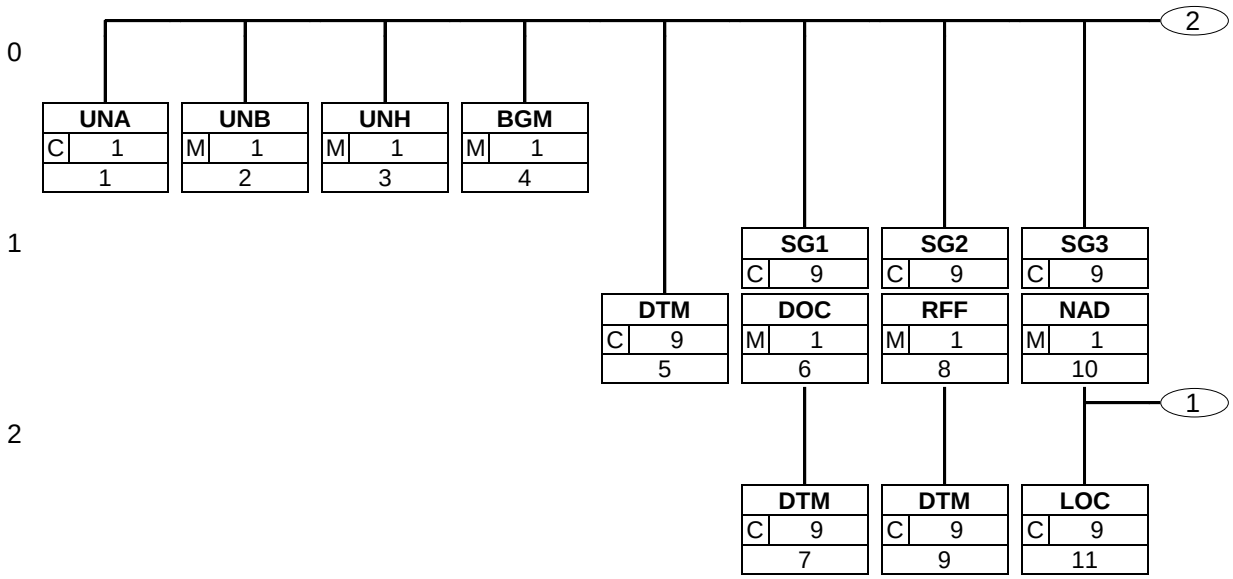

3. Branching Diagram

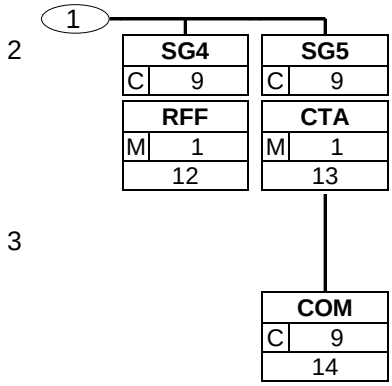

3. Branching Diagram

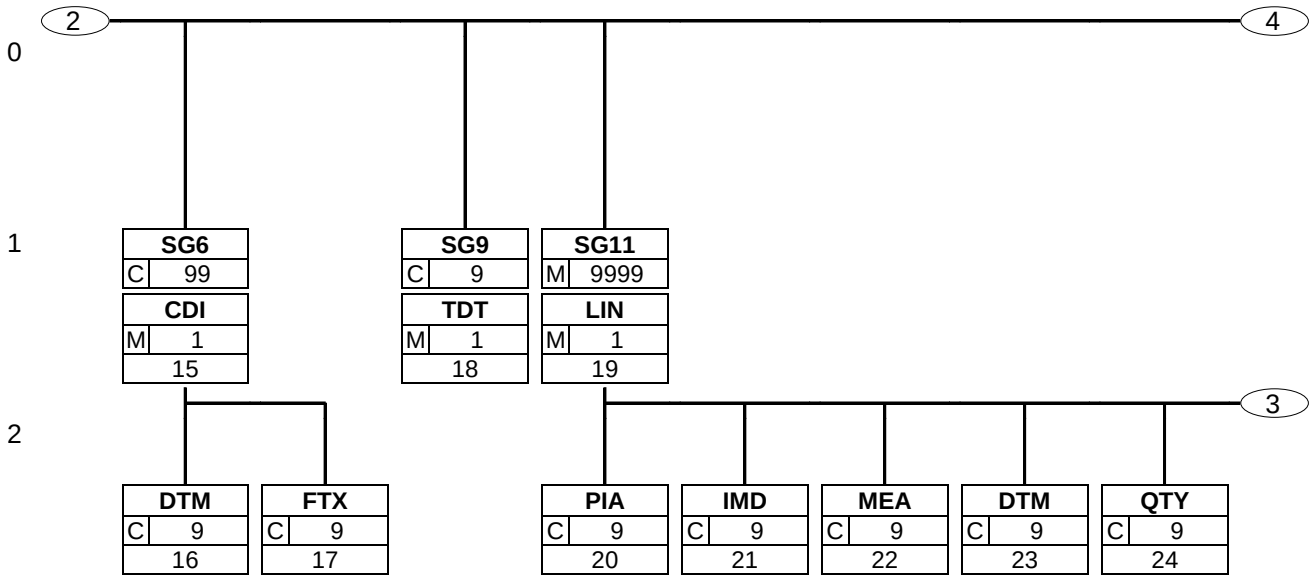

3. Branching Diagram

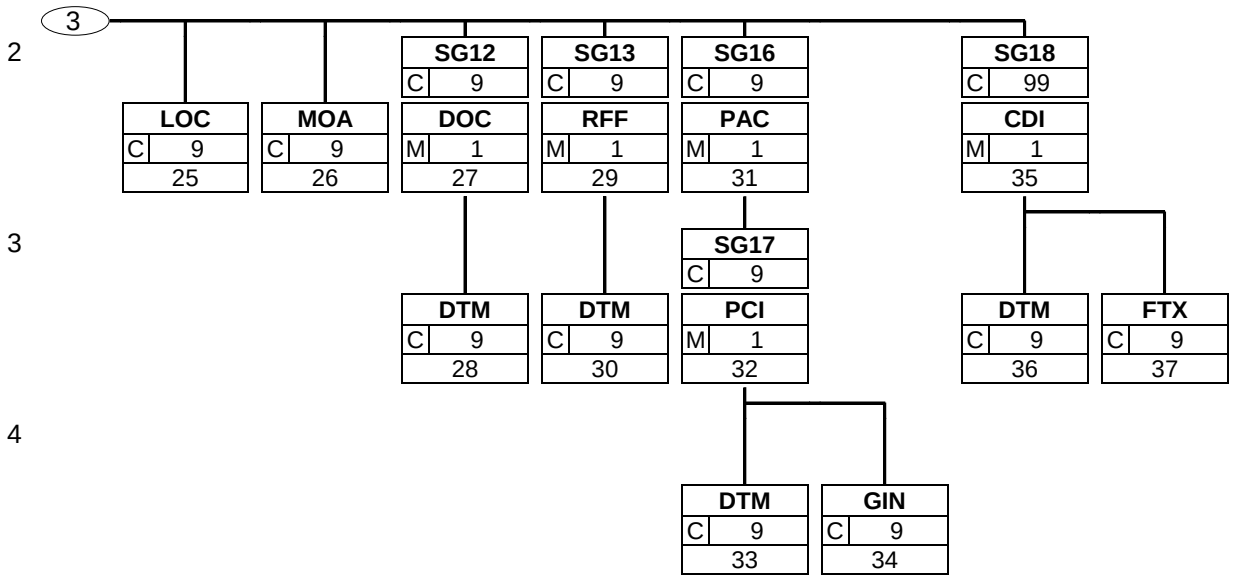

3. Branching Diagram

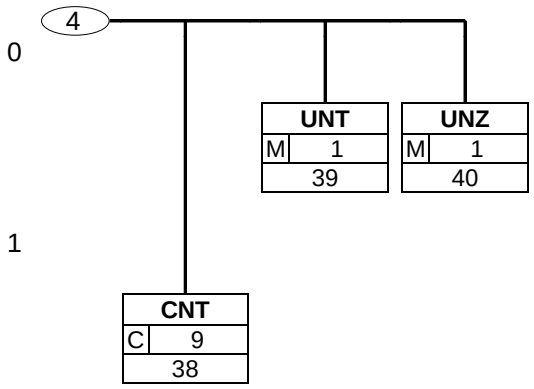

4. Segments Description

UNA - C 1 - Service string advice

This segment is used to inform the receiver of the interchange that a set of service string characters which are different to the default characters are being used.

UNB - M 1 - Interchange header

This segment is used to envelope the interchange, as well as to identify both, the party to whom the interchange is sent and the party who has sent the interchange. The principle of the UNB segment is the same as a physical envelope which covers one or more letters or documents, and which details, both the address where delivery is to take place and the address from where the envelope has come.

Instruction For Returns Heading Section

UNH - M 1 - Message header

This segment is used to head, identify and specify a message.

BGM - M 1 - Beginning of message

This segment is used to indicate the type and function of a message and to transmit the identifying number.

DTM - C 9 - Date/time/period

This segment is used to specify any dates applicable to the complete instruction for returns message.

SG1 - C 9 - **DOC-DTM**

A group of segments by which the sender of the message indicates to the receiver what type of document or message will accompany or follow the instruction for returns message, e.g., a credit note.

DOC - M 1 - Document/message details

This segment is used to identify any documents which the message sender has or will raise for the message recipient as a result of a previously sent announcement for returns message.

DTM - C 9 - Date/time/period

This segment is used to specify dates related to the document type specified in the DOC segment.

SG2 - C 9 - **RFF-DTM**

A group of segments providing references and any associated dates related to the current message, e.g. announcement for returns number, invoice, etc.

RFF - M 1 - Reference

This segment is used to specify any references valid for the complete instruction for returns message.

DTM - C 9 - Date/time/period

This segment is used to specify any dates related to the previous RFF segment.

SG3 - C 9 - **NAD-LOC-SG4-SG5**

A group of segments identifying the parties involved in the instruction to return message and any associated information.

NAD - M 1 - Name and address

This segment is used to identify the parties involved in the instructions for returns process.

LOC - C 9 - Place/location identification

This segment is used to identify any locations related to the party identified in the NAD segment.

SG4 - C 9 - **RFF**

A group of segments for specifying any references relating to the current party.

4. Segments Description

RFF - M 1 - Reference

This segment is used to specify reference numbers related to the trading parties identified in the NAD segment.

SG5 - C 9 - **CTA-COM**

A group of segments identifying the contact person or department for the current party and if required specifying the communication channel and number.

CTA - M 1 - Contact information

This segment is used to identify the department and/or person within the party specified in the NAD.

COM - C 9 - Communication contact

This segment is used to identify the communications number and the type of communications used for the person or department identified in the CTA segment.

SG6 - C 99 - **CDI-DTM-FTX**

A group of segments identifying any states, dates or additional references related to the complete instruction for return message.

CDI - M 1 - Physical or logical state

This segment is used to indicate conditions specified by the message sender concerning the return or otherwise of all the goods detailed in the message.

DTM - C 9 - Date/time/period

This segment is used to specify dates relevant to the returns conditions and instructions provided in the CDI and INS segments for the entire message.

FTX - C 9 - Free text

This segment is used to indicate free text information related to the entire message.

SG9 - C 9 - **TDT**

A segment identifying the mode and means of transport relating to the whole instruction for returns.

TDT - M 1 - Details of transport

This segment is used to identify the mode and means of transport which will be used to return the goods detailed in the message.

Instruction For Returns Detail Section

SG11 - M 9999 - **LIN-PIA-IMD-MEA-DTM-QTY-LOC-MOA-SG12-SG13-SG16-SG18**

A group of segments providing details of the individual items for which instruction for returns are being provided. There must be at least one occurrence of this group within an instruction for returns.

LIN - M 1 - Line item

This segment indicates the beginning of the detail section of the instruction for returns message.

PIA - C 9 - Additional product id

This segment is used to specify additional or substitutional item identification codes such as a buyer's or supplier's item number.

IMD - C 9 - Item description

This segment is used to describe the current line item.

MEA - C 9 - Measurements

This segment is used to specify any relevant measurements for the line item being returned.

DTM - C 9 - Date/time/period

This segment is used to specify any dates applicable to the current line item only.

4. Segments Description

QTY	- C 9	- Quantity This segment is used to specify any quantities relevant for the current line item.
LOC	- C 9	- Place/location identification This segment is used to identify locations relevant to the current line item.
MOA	- C 9	- Monetary amount This segment is used to specify any monetary amount relevant to the current line item.
SG12	- C 9	- **DOC-DTM** A group of segments by which the sender of the message indicates to the receiver what type of document or message will accompany or follow the instruction for returns message, e.g., a credit note, for the current line item.
DOC	- M 1	- Document/message details This segment is used to identify any documents relevant to the current line item.
DTM	- C 9	- Date/time/period This segment is used to specify dates related to the document specified in the DOC segment.
SG13	- C 9	- **RFF-DTM** A group of segments for specifying any references relating to the current line item only, e.g. invoice number, etc.
RFF	- M 1	- Reference This segment is used to specify any references valid for the current line item only.
DTM	- C 9	- Date/time/period This segment is used to specify dates and times of the reference specified in the previous RFF segment.
SG16	- C 9	- **PAC-SG17** A group of segments identifying packaging, marks and numbers, date and time information about packing for the product for which an instruction for returns is provided.
PAC	- M 1	- Package This segment is used to provide packaging information for the line item being returned.
SG17	- C 9	- **PCI-DTM-GIN** A group of segments specifying markings, labels, and packing numbers.
PCI	- M 1	- Package identification This segment is used to provide markings and labels information relevant to the packaging unit identified in the PAC segment. This information may be used at the time of collection to correctly identify the packages for return.
DTM	- C 9	- Date/time/period This segment is used to specify dates related to the packaging for the current line item.
GIN	- C 9	- Goods identity number This segment is used to provide identification numbers relevant to the packaging unit identified in the PAC segment.
SG18	- C 99	- **CDI-DTM-FTX** A group of segments identifying any states, dates or additional references related to the return of the current line item.
CDI	- M 1	- Physical or logical state This segment is used to indicate conditions (actions) requested by the message sender for the current line item.

4. Segments Description

DTM - C 9 - Date/time/period

This segment is used to specify dates relevant to the returns conditions and instructions provided in the CDI and INS segments for the current line item.

FTX - C 9 - Free text

This segment is used to indicate free text information related to the conditions of the current line item.

Instruction For Returns Summary Section

CNT - C 9 - Control total

This is used to provide message control information for checking on the message receivers in-house system.

UNT - M 1 - Message trailer

The UNT segment is a mandatory UN/EDIFACT segment. It must always be the last segment in the message.

UNZ - M 1 - Interchange trailer

This segment is used to provide the trailer of an interchange.

5. Segments Layout

This section describes each segment used in the EANCOM® Returns instruction message. The original EDIFACT segment layout is listed. The appropriate comments relevant to the EANCOM® subset are indicated.

Notes:

1. The segments are presented in the sequence in which they appear in the message. The segment or segment group tag is followed by the (M)andatory / (C)onditional indicator, the maximum number of occurrences and the segment description.

2. Reading from left to right, in column one, the data element tags and descriptions are shown, followed by in the second column the EDIFACT status (M or C), the field format, and the picture of the data elements. These first pieces of information constitute the original EDIFACT segment layout.

   Following the EDIFACT information, EANCOM® specific information is provided in the third, fourth, and fifth columns. In the third column a status indicator for the use of (C)onditional EDIFACT data elements (see 2.1 through 2.3 below), in the fourth column the restricted indicator (see point 3 on the following page), and in the fifth column notes and code values used for specific data elements in the message.

2.1 (M)andatory data elements in EDIFACT segments retain their status in EANCOM®.

2.2 Additionally, there are five types of status for data elements with a (C)onditional EDIFACT status, whether for simple, component or composite data elements. These are listed below and can be identified when relevant by the following abbreviations:

- REQUIRED	**R**	Indicates that the entity is required and must be sent.
- ADVISED	**A**	Indicates that the entity is advised or recommended.
- DEPENDENT	**D**	Indicates that the entity must be sent in certain conditions, as defined by the relevant explanatory note.
- OPTIONAL	**O**	Indicates that the entity is optional and may be sent at the discretion of the user.
- NOT USED	**N**	Indicates that the entity is not used and should be omitted.

2.3 If a composite is flagged as **N, NOT USED**, all data elements within that composite will have blank status indicators assigned to them.

3. Status indicators detailed in the fourth column which directly relate to the code values detailed in the fifth **column** may have two values:

- RESTRICTED	*****	A data element marked with an asterisk (*) in the fourth column indicates that the listed codes in column five are the only codes available for use with this data element, in this segment, in this message.
- OPEN		All data elements where coded representation of data is possible and a restricted set of code values is not indicated are open (no asterisk in fourth column). The available codes are listed in the EANCOM® Data Elements and Code Sets Directory. Code values may be given as examples or there may be a note on the format or type of code to be used.

4. Different colours are used for the code values in the segment details: restricted codes are in red and open codes in blue.

5. Segments Layout

Segment number: 1

UNA - C 1 - Service string advice					
Function: The service string advice shall begin with the upper case characters UNA immediately followed by six characters in the order shown below. The space character shall not be used in positions 010, 020, 040, 050 or 060. The same character shall not be used in more than one position of the UNA.					
		EDIFACT	GS1	*	Description
UNA1	Component data element separator	M an1	**M**	*	Used as a separator between component data elements contained within a composite data element (default value: ":")
UNA2	Data element separator	M an1	**M**	*	Used to separate two simple or composite data elements (default value: "+")
UNA3	Decimal mark	M an1	**M**	*	Used to indicate the character used for decimal notation (default value:".")
UNA4	Release character	M an1	**M**	*	Used to restore any service character to its original specification (value: "?").
UNA5	Repetition separator	M an1	**M**	*	Used to indicate the character used for repetition separation (value: " * ").
UNA6	Segment terminator	M an1	**M**	*	Used to indicate the end of segment data (default value: " ' ")
Segment Notes: This segment is used to inform the receiver of the interchange that a set of service string characters which are different to the default characters are being used. When using the default set of service characters, the UNA segment need not be sent. If it is sent, it must immediately precede the UNB segment and contain the four service string characters (positions UNA1, UNA2, UNA4 and UNA6) selected by the interchange sender. Regardless of whether or not all of the service string characters are being changed every data element within this segment must be filled, (i.e., if some default values are being used with user defined ones, both the default and user defined values must be specified). When expressing the service string characters in the UNA segment, it is not necessary to include any element separators. The use of the UNA segment is required when using a character set other than level A. UNA:+.?*'					

5. Segments Layout

Segment number: 2

UNB	- M	1 - Interchange header

Function:

To identify an interchange.

Notes:
1. S001/0002, shall be '4' to indicate this version of the syntax.
2. The combination of the values carried in data elements S002, S003 and 0020 shall be used to identify uniquely the interchange, for the purpose of acknowledgement.

		EDIFACT	GS1	*	Description
S001	SYNTAX IDENTIFIER	M	**M**		See Part I chapter 5.2.7 and segment notes.
0001	Syntax identifier	M a4	**M**	*	UNOA = UN/ECE level A UNOB = UN/ECE level B UNOC = UN/ECE level C UNOD = UN/ECE level D UNOE = UN/ECE level E UNOF = UN/ECE level F UNOG = UN/ECE level G UNOH = UN/ECE level H UNOI = UN/ECE level I UNOJ = UN/ECE level J UNOK = UN/ECE level K UNOW = UN/ECE level W UNOX = UN/ECE level X UNOY = UN/ECE level Y
0002	Syntax version number	M an1	**M**	*	4 = Version 4
0080	Service code list directory version number	C an..6	**N**		
0133	Character encoding, coded	C an..3	**N**		
S002	INTERCHANGE SENDER	M	**M**		
0004	Interchange sender identification	M an..35	**M**		GLN (n13)
0007	Identification code qualifier	C an..4	**R**	*	14 = GS1
0008	Interchange sender internal identification	C an..35	**O**		
0042	Interchange sender internal sub-identification	C an..35	**N**		
S003	INTERCHANGE RECIPIENT	M	**M**		
0010	Interchange recipient identification	M an..35	**M**		GLN (n13)
0007	Identification code qualifier	C an..4	**R**	*	14 = GS1
0014	Interchange recipient internal identification	C an..35	**O**		
0046	Interchange recipient internal sub-identification	C an..35	**N**		
S004	DATE AND TIME OF PREPARATION	M	**M**		
0017	Date	M n8	**M**		CCYYMMDD
0019	Time	M n4	**M**		HHMM
0020	Interchange control reference	M an..14	**M**		Unique reference identifying the interchange. Created

5. Segments Layout

Segment number: 2

		EDIFACT	GS1	*	Description
					by the interchange sender.
S005	RECIPIENT REFERENCE/ PASSWORD DETAILS	C	**O**		
0022	Recipient reference/password	M an..14	**M**		
0025	Recipient reference/password qualifier	C an2	**O**		
0026	Application reference	C an..14	**O**		Message identification if the interchange contains only one type of message.
0029	Processing priority code	C a1	**O**		A = Highest priority
0031	Acknowledgement request	C n1	**O**		1 = Requested
0032	Interchange agreement identifier	C an..35	**O**	*	EANCOM.....
0035	Test indicator	C n1	**O**		1 = Interchange is a test

Segment Notes:

This segment is used to envelope the interchange, as well as to identify both, the party to whom the interchange is sent and the party who has sent the interchange. The principle of the UNB segment is the same as a physical envelope which covers one or more letters or documents, and which details, both the address where delivery is to take place and the address from where the envelope has come.
S001: The character encoding specified in basic code table of ISO/IEC 646 (7-bit coded character set for information interchange) shall be used for the interchange service string advice (if used) and up to and including the composite data element S001 'Syntax identifier' in the interchange header. The character repertoire used for the characters in an interchange shall be identified from the code value of data element 0001 in S001 'Syntax identifier' in the interchange header. The character repertoire identified does not apply to objects and/or encrypted data.
The default encoding technique for a particular repertoire shall be the encoding technique defined by its associated character set specification.
DE 0001: The recommended (default) character set for use in EANCOM® for international exchanges is character set A (UNOA). Should users wish to use character sets other than A, an agreement on which set to use should be reached on a bilateral basis before communications begin.
DE 0004, 0008, 0010 and 0014: Within EANCOM® the use of the Global Location Number (GLN) is recommended for the identification of the interchange sender and recipient.
DE 0008: Identification (e.g. a division) specified by the sender of the interchange, to be included if agreed, by the recipient in response interchanges, to facilitate internal routing.
DE 0014: The address for routing, provided beforehand by the interchange recipient, is used by the interchange sender to inform the recipient of the internal address, within the latter's systems, to which the interchange should be routed. It is recommended that the GLN be used for this purpose.
DE 0007: Identification (e.g. a division) specified by the recipient of the interchange, to be included if agreed, by the sender in response interchanges, to facilitate internal routing.
DE S004: The date and time specified in this composite should be the date and time at which the interchange sender prepared the interchange. This date and time may not necessarily be the same as the date and time of contained messages.
DE 0020: The interchange control reference number is generated by the interchange sender and is used to identify uniquely each interchange. Should the interchange sender wish to re-use interchange control reference numbers, it is recommended that each number be preserved for at least a period of three months before being re-used. In order to guarantee uniqueness, the interchange control reference number should always be linked to the interchange sender's identification (DE 0004).
DE S005: The use of passwords must first be agreed bilaterally by the parties exchanging the interchange.
DE 0026: This data element is used to identify the application, on the interchange recipient's system, to which the interchange is directed. This data element may only be used if the interchange contains only one type of message, (e.g. only invoices). The reference used in this data element is assigned by the interchange sender.
DE 0031: This data element is used to indicate whether an acknowledgement to the interchange is required. The EANCOM® APERAK or CONTRL message should be used to provide acknowledgement of interchange receipt. In addition, the EANCOM® CONTRL message may be used to indicate when an interchange has been rejected

5. Segments Layout

Segment number: 2

due to syntax errors.
DE 0032: This data element is used to identify any underlying agreements which control the exchange of data. Within EANCOM® , the identity of such agreements must start with the letters 'EANCOM', the remaining characters within the data element being filled according to bilateral agreements.

UNB+UNOC:4+5412345678908:14+8798765432106:14+20020102:1000+12345555+++++EANCOMREF 52'

5. Segments Layout

Segment number: 3

UNH	- M	1 - Message header

Function:

To head, identify and specify a message.

Notes:
1. Data element S009/0057 is retained for upward compatibility. The use of S016 and/or S017 is encouraged in preference.
2. The combination of the values carried in data elements 0062 and S009 shall be used to identify uniquely the message within its group (if used) or if not used, within its interchange, for the purpose of acknowledgement.

		EDIFACT	GS1	*	Description
0062	Message reference number	M an..14	**M**		Senders unique message reference. Sequence number of the messages in the interchange. DE 0062 in the UNT will be identical. Sender generated.
S009	MESSAGE IDENTIFIER	M	**M**		
0065	Message type	M an..6	**M**	*	RETINS = Instruction for returns message
0052	Message version number	M an..3	**M**	*	D = Draft version/UN/EDIFACT Directory
0054	Message release number	M an..3	**M**	*	01B = Release 2001 - B
0051	Controlling agency, coded	M an..3	**M**	*	UN = UN/CEFACT
0057	Association assigned code	C an..6	**R**	*	EAN003 = GS1 version control number (GS1 Permanent Code) Indicates that the message is the EANCOM version 003 of the UNSM Instruction For Returns.
0110	Code list directory version number	C an..6	**O**		This data element can be used to identify the codelist agreed by the interchange partners, e.g. EAN001 = EANCOM 2002 S4 codelist released on 01.12.2002 by GS1.
0113	Message type sub-function identification	C an..6	**N**		
0068	Common access reference	C an..35	**N**		
S010	STATUS OF THE TRANSFER	C	**N**		
0070	Sequence of transfers	M n..2			
0073	First and last transfer	C a1			
S016	MESSAGE SUBSET IDENTIFICATION	C	**N**		
0115	Message subset identification	M an..14			
0116	Message subset version number	C an..3			
0118	Message subset release number	C an..3			
0051	Controlling agency, coded	C an..3			
S017	MESSAGE IMPLEMENTATION GUIDELINE IDENTIFICATION	C	**N**		
0121	Message implementation guideline identification	M an..14			
0122	Message implementation guideline version number	C an..3			
0124	Message implementation	C an..3			

5. Segments Layout

Segment number: 3

		EDIFACT	GS1	*	Description
	guideline release number				
0051	Controlling agency, coded	C an..3			
S018	SCENARIO IDENTIFICATION	C	**N**		
0127	Scenario identification	M an..14			
0128	Scenario version number	C an..3			
0130	Scenario release number	C an..3			
0051	Controlling agency, coded	C an..3			

Segment Notes:

This segment is used to head, identify and specify a message.
DE's 0065, 0052, and 0054: Indicate that the message is a UNSM Instruction For Returns message based on the D.01B directory.

Example:
UNH+ME000001+RETINS:D:01B:UN:EAN003'

5. Segments Layout

Segment number: 4

BGM	- M	1 - Beginning of message			
Function: To indicate the type and function of a message and to transmit the identifying number.					
		EDIFACT	GS1	*	Description
C002	DOCUMENT/MESSAGE NAME	C	**R**		
1001	Document name code	C an..3	**R**	*	733 = Instruction for returns
1131	Code list identification code	C an..17	**N**		
3055	Code list responsible agency code	C an..3	**R**	*	9 = GS1
1000	Document name	C an..35	**O**		
C106	DOCUMENT/MESSAGE IDENTIFICATION	C	**R**		
1004	Document identifier	C an..35	**R**		Instruction for returns number assigned by the document sender. For global unique identification of documents Global Document Type Identifier (GDTI) is available.
1056	Version identifier	C an..9	**N**		
1060	Revision identifier	C an..6	**N**		
1225	Message function code	C an..3	**R**	*	1 = Cancellation 6 = Confirmation 7 = Duplicate 9 = Original 31 = Copy The message function, coded is a critical data element in this segment. It applies to all data indicated in the message. The following definitions apply for the restricted codes: 1= Cancellation - A cancellation of a previously sent instruction for returns. The identification of the instruction for returns being cancelled is provided in the RFF segment. 6 = Confirmation - A confirmation of a previously transmitted instruction for returns message. 7 = Duplicate - A re-transmission of a previously sent instruction for returns message involving the same parties at the specific request of the receiver. 9 = Original - An indication to the receiver that this is an original instruction for returns. 31 = Copy - A copy of an original message which has been sent for action or information purposes.
4343	Response type code	C an..3	**N**		
Segment Notes: This segment is used to indicate the type and function of a message and to transmit the identifying number. All references other than the document number DE 1004 are to be put in the RFF segment. Example: BGM+733::9+432097+9'					

5. Segments Layout

Segment number: 5

DTM	- C	9 - Date/time/period			
Function: To specify date, and/or time, or period.					
		EDIFACT	GS1	*	Description
C507	DATE/TIME/PERIOD	M	**M**		
2005	Date or time or period function code qualifier	M an..3	**M**	*	137 = Document/message date/time
2380	Date or time or period value	C an..35	**R**		
2379	Date or time or period format code	C an..3	**R**		102 = CCYYMMDD 203 = CCYYMMDDHHMM

Segment Notes:

This segment is used to specify any dates applicable to the complete instruction for returns message.
DE 2005: Identification of the 'Document/message date/time' (code value 137) is mandatory in an EANCOM message.

Example:
DTM+137:20021201:102'

5. Segments Layout

Segment number: 6

SG1	- C	9 -	DOC-DTM
DOC	- M	1 -	Document/message details

Function:

To identify documents and details directly related to it.

		EDIFACT	GS1	*	Description
C002	DOCUMENT/MESSAGE NAME	M	**M**		
1001	Document name code	C an..3	**R**		381 = Credit note - goods and services
1131	Code list identification code	C an..17	**O**		
3055	Code list responsible agency code	C an..3	**D**		
1000	Document name	C an..35	**N**		
C503	DOCUMENT/MESSAGE DETAILS	C	**O**		
1004	Document identifier	C an..35	**O**		
1373	Document status code	C an..3	**O**		4 = To arrive by separate EDI message 7 = To be raised and sent
1366	Document source description	C an..70	**N**		
3453	Language name code	C an..3	**N**		
1056	Version identifier	C an..9	**N**		
1060	Revision identifier	C an..6	**N**		
3153	Communication medium type code	C an..3	**N**		
1220	Document copies required quantity	C n..2	**N**		
1218	Document originals required quantity	C n..2	**N**		

Segment Notes:

This segment is used to identify any documents which the message sender has or will raise for the message recipient as a result of a previously sent announcement for returns message.

Example:

Example:
DOC+381'

5. Segments Layout

Segment number: 7

SG1	- C	9 -	DOC-DTM
DTM	- C	9 -	Date/time/period

Function:

To specify date, and/or time, or period.

		EDIFACT	GS1	*	Description
C507	DATE/TIME/PERIOD	M	**M**		
2005	Date or time or period function code qualifier	M an..3	**M**	*	137 = Document/message date/time
2380	Date or time or period value	C an..35	**R**		
2379	Date or time or period format code	C an..3	**R**		102 = CCYYMMDD 203 = CCYYMMDDHHMM 718 = CCYYMMDD-CCYYMMDD

Segment Notes:

This segment is used to specify dates related to the document type specified in the DOC segment.

Example:
DTM+137:20021210:102'

5. Segments Layout

Segment number: 8

SG2	- C	9 -	RFF-DTM
RFF	- M	1 -	Reference

Function:

To specify a reference.

		EDIFACT	GS1	*	Description
C506	REFERENCE	M	**M**		
1153	Reference code qualifier	M an..3	**M**		AAK = Despatch advice number ALQ = Returns notice number AXB = Instruction for returns number CT = Contract number IV = Invoice number
1154	Reference identifier	C an..70	**R**		
1156	Document line identifier	C an..6	**N**		
4000	Reference version identifier	C an..35	**N**		
1060	Revision identifier	C an..6	**N**		

Segment Notes:

This segment is used to specify any references valid for the complete instruction for returns message.

Example:
RFF+IV:52114'

5. Segments Layout

Segment number: 9

SG2	- C	9 -	RFF-DTM
DTM	- C	9 -	Date/time/period

Function:

To specify date, and/or time, or period.

		EDIFACT	GS1	*	Description
C507	DATE/TIME/PERIOD	M	**M**		
2005	Date or time or period function code qualifier	M an..3	**M**	*	171 = Reference date/time
2380	Date or time or period value	C an..35	**R**		
2379	Date or time or period format code	C an..3	**R**		102 = CCYYMMDD 203 = CCYYMMDDHHMM

Segment Notes:

This segment is used to specify any dates related to the previous RFF segment.

Example:
DTM+171:20021125:102'

5. Segments Layout

Segment number: 10

SG3	- C	9 -	NAD-LOC-SG4-SG5
NAD	- M	1 -	Name and address

Function:

To specify the name/address and their related function, either by C082 only and/or unstructured by C058 or structured by C080 thru 3207.

		EDIFACT	GS1	*	Description
3035	Party function code qualifier	M an..3	**M**		BY = Buyer CZ = Consignor PW = Despatch party SE = Seller SN = Store number SR = Supplier's agent/representative SU = Supplier
C082	PARTY IDENTIFICATION DETAILS	C	**A**		
3039	Party identifier	M an..35	**M**		Global Location Number GLN - Format n13 For identification of parties it is recommended to use GLN - Format n13.
1131	Code list identification code	C an..17	**N**		
3055	Code list responsible agency code	C an..3	**R**	*	9 = GS1
C058	NAME AND ADDRESS	C	**O**		This composite may only be used to fulfill the requirements of directive 2003/58/EC, article 4.
3124	Name and address description	M an..35	**M**		
3124	Name and address description	C an..35	**O**		
3124	Name and address description	C an..35	**O**		
3124	Name and address description	C an..35	**O**		
3124	Name and address description	C an..35	**O**		
C080	PARTY NAME	C	**D**		
3036	Party name	M an..35	**M**		Party Name in clear text.
3036	Party name	C an..35	**O**		
3036	Party name	C an..35	**O**		
3036	Party name	C an..35	**O**		
3036	Party name	C an..35	**O**		
3045	Party name format code	C an..3	**O**		
C059	STREET	C	**D**		
3042	Street and number or post office box identifier	M an..35	**M**		Building Name/Number and Street Name and/or P.O. Box
3042	Street and number or post office box identifier	C an..35	**O**		
3042	Street and number or post office box identifier	C an..35	**O**		
3042	Street and number or post office box identifier	C an..35	**O**		
3164	City name	C an..35	**D**		City/Town, clear text.
C819	COUNTRY SUB-ENTITY	C	**D**		

5. Segments Layout

Segment number: 10

		EDIFACT	GS1	*	Description
	DETAILS				
3229	Country sub-entity name code	C an..9	**O**		
1131	Code list identification code	C an..17	**O**		
3055	Code list responsible agency code	C an..3	**O**		
3228	Country sub-entity name	C an..70	**O**		County/State, clear text.
3251	Postal identification code	C an..17	**D**		Postal code
3207	Country name code	C an..3	**D**		ISO 3166 two alpha code

Segment Notes:

This segment is used to identify the parties involved in the instructions for returns process.

Example:
NAD+BY+5412345000020::9'
NAD+SU+4012345500004::9'

Dependency Notes:
The following composites and data elements are only used when a coded name and address can not be used.
The affected composites and data elements are as follows:
C080 - C059 - 3164 - C819 - 3251 - 3207

5. Segments Layout

Segment number: 11

SG3	- C	9 -	NAD-LOC-SG4-SG5
LOC	- C	9 -	Place/location identification

Function:

To identify a place or a location and/or related locations.

		EDIFACT	GS1	*	Description
3227	Location function code qualifier	M an..3	**M**		14 = Location of goods 23E = Return location (GS1 Temporary Code) Code value '14' is used to indicate the place where the goods for return are located.
C517	LOCATION IDENTIFICATION	C	**R**		
3225	Location name code	C an..25	**A**		GLN - Format n13
1131	Code list identification code	C an..17	**O**		
3055	Code list responsible agency code	C an..3	**D**		9 = GS1 DE 3055 must be used if DE 3225 is used and does not contain an UN/LOCODE.
3224	Location name	C an..256	**O**		
C519	RELATED LOCATION ONE IDENTIFICATION	C	**N**		
3223	First related location name code	C an..25			
1131	Code list identification code	C an..17			
3055	Code list responsible agency code	C an..3			
3222	First related location name	C an..70			
C553	RELATED LOCATION TWO IDENTIFICATION	C	**N**		
3233	Second related location name code	C an..25			
1131	Code list identification code	C an..17			
3055	Code list responsible agency code	C an..3			
3232	Second related location name	C an..70			
5479	Relation code	C an..3	**N**		

Segment Notes:

This segment is used to identify any locations related to the party identified in the NAD segment.

Example:
LOC+14+5412345678908::9'

5. Segments Layout

Segment number: 12

SG3	- C	9 -	NAD-LOC-SG4-SG5
SG4	- C	9 -	RFF
RFF	- M	1 -	Reference

Function:

To specify a reference.

		EDIFACT	GS1	*	Description
C506	REFERENCE	M	**M**		
1153	Reference code qualifier	M an..3	**M**	*	GN = Government reference number VA = VAT registration number XA = Company/place registration number YC1 = Additional party identification (GS1 Temporary Code)
1154	Reference identifier	C an..70	**R**		
1156	Document line identifier	C an..6	**N**		
4000	Reference version identifier	C an..35	**N**		
1060	Revision identifier	C an..6	**N**		

Segment Notes:

This segment is used to specify reference numbers related to the trading parties identified in the NAD segment.

Example:
RFF+VA:VR12345'

5. Segments Layout

Segment number: 13

SG3	- C	9 -	NAD-LOC-SG4-SG5
SG5	- C	9 -	CTA-COM
CTA	- M	1 -	Contact information

Function:

To identify a person or a department to whom communication should be directed.

		EDIFACT	GS1	*	Description
3139	Contact function code	C an..3	**R**		IC = Information contact
C056	DEPARTMENT OR EMPLOYEE DETAILS	C	**O**		
3413	Department or employee name code	C an..17	**O**		
3412	Department or employee name	C an..35	**O**		

Segment Notes:

This segment is used to identify the department and/or person within the party specified in the NAD.
The Global Location Number GLN - Format n13 - is particularly suitable for this purpose.

Example:
CTA+IC+:MARK CARTER'

5. Segments Layout

Segment number: 14

SG3	- C	9 -	NAD-LOC-SG4-SG5
SG5	- C	9 -	CTA-COM
COM	- C	9 -	Communication contact

Function:

To identify a communication number of a department or a person to whom communication should be directed.

		EDIFACT	GS1	*	Description
C076	COMMUNICATION CONTACT	M	**M**		
3148	Communication address identifier	M an..512	**M**		
3155	Communication address code qualifier	M an..3	**M**		AO = Uniform Resource Location (URL) EM = Electronic mail TE = Telephone

Segment Notes:

This segment is used to identify the communications number and the type of communications used for the person or department identified in the CTA segment.

Example:
COM+005822630909:TE'

5. Segments Layout

Segment number: 15

SG6	- C	99 -	CDI-DTM-FTX
CDI	- M	1 -	Physical or logical state

Function:

To describe a physical or logical state.

		EDIFACT	GS1	*	Description
7001	Physical or logical state type code qualifier	M an..3	**M**		3E = Upon return (GS1 Temporary Code)
C564	PHYSICAL OR LOGICAL STATE INFORMATION	M	**M**		
7007	Physical or logical state description code	C an..3	**A**		12E = Return goods (GS1 Temporary Code) 13E = Dispose of goods (GS1 Temporary Code) 14E = Destroy goods (GS1 Temporary Code) 15E = Repair goods (GS1 Temporary Code) 16E = Hold for examination (GS1 Temporary Code) 17E = Return refused (GS1 Temporary Code)
1131	Code list identification code	C an..17	**O**		
3055	Code list responsible agency code	C an..3	**D**		9 = GS1
7006	Physical or logical state description	C an..70	**O**		

Segment Notes:

This segment is used to indicate conditions specified by the message sender concerning the return or otherwise of all the goods detailed in the message.

Example:
CDI+3E+13E::9'
All of the goods detailed in the message should be disposed of.

5. Segments Layout

Segment number: 16

SG6	- C	99 -	CDI-DTM-FTX
DTM	- C	9 -	Date/time/period

Function:

To specify date, and/or time, or period.

		EDIFACT	GS1	*	Description
C507	DATE/TIME/PERIOD	M	**M**		
2005	Date or time or period function code qualifier	M an..3	**M**		234 = Collection date/time, earliest 235 = Collection date/time, latest 557 = Returned date
2380	Date or time or period value	C an..35	**R**		
2379	Date or time or period format code	C an..3	**R**		102 = CCYYMMDD 203 = CCYYMMDDHHMM

Segment Notes:

This segment is used to specify dates relevant to the returns conditions and instructions provided in the CDI and INS segments for the entire message.

Example:
DTM+234:20020601:102'

5. Segments Layout

Segment number: 17

SG6	- C	99 -	CDI-DTM-FTX
FTX	- C	9 -	Free text

Function:

To provide free form or coded text information.

		EDIFACT	GS1	*	Description
4451	Text subject code qualifier	M an..3	**M**		AAI = General information BAI = Additional product information address BAL = Non-acceptance information BAM = Returns information
4453	Free text function code	C an..3	**O**	*	1 = Text for subsequent use
C107	TEXT REFERENCE	C	**D**		This composite is only used when trading partners have agreed to use mutually defined code values.
4441	Free text value code	M an..17	**M**		
1131	Code list identification code	C an..17	**O**		
3055	Code list responsible agency code	C an..3	**D**		9 = GS1 92 = Assigned by buyer or buyer's agent
C108	TEXT LITERAL	C	**D**		This composite is only used if coded text can not be used.
4440	Free text value	M an..512	**M**		
4440	Free text value	C an..512	**O**		
4440	Free text value	C an..512	**O**		
4440	Free text value	C an..512	**O**		
4440	Free text value	C an..512	**O**		
3453	Language name code	C an..3	**D**		ISO 639 two alpha code This data element is only used when non coded free text has been provided in data element C108.
4447	Free text format code	C an..3	**N**		

Segment Notes:

This segment is used to indicate free text information related to the entire message.
Use of this segment in free form is not recommended since in most cases it inhibits automatic message processing.
Coded references to standard texts is an available functionality which enables automatic processing and reduces transmission and processing overheads. Standard texts should be mutually defined among trading partners and can be used to cover legal and other requirements.

Example:
FTX+BAM+1+001::92'
Standard text 001 = 'PLEASE ENSURE GOODS ARE DISPOSED OF IN CORRECT MANNER.'

5. Segments Layout

Segment number: 18

SG9	- C	9 -	TDT
TDT	- M	1 -	Details of transport

Function:

To specify the transport details such as mode of transport, means of transport, its conveyance reference number and the identification of the means of transport.
The segment may be pointed to by the TPL segment.

		EDIFACT	GS1	*	Description
8051	Transport stage code qualifier	M an..3	**M**		10 = Pre-carriage transport 20 = Main-carriage transport 30 = On-carriage transport
8028	Means of transport journey identifier	C an..17	**O**		Reference number covering the transport.
C220	MODE OF TRANSPORT	C	**A**		
8067	Transport mode name code	C an..3	**R**		
8066	Transport mode name	C an..17	**N**		
C228	TRANSPORT MEANS	C	**O**		Data Elements 8179 and 8178 are only used when the type of transport must be specifically identified, that is, a generic description such as road transport is unsuitable.
8179	Transport means description code	C an..8	**D**		23 = Rail bulk car 31 = Truck
8178	Transport means description	C an..17	**D**		
C040	CARRIER	C	**O**		
3127	Carrier identifier	C an..17	**A**		Global Location Number GLN - Format n13
1131	Code list identification code	C an..17	**O**		
3055	Code list responsible agency code	C an..3	**D**		9 = GS1
3128	Carrier name	C an..35	**O**		
8101	Transit direction indicator code	C an..3	**N**		
C401	EXCESS TRANSPORTATION INFORMATION	C	**N**		
8457	Excess transportation reason code	M an..3			
8459	Excess transportation responsibility code	M an..3			
7130	Customer shipment authorisation identifier	C an..17			
C222	TRANSPORT IDENTIFICATION	C	**O**		
8213	Transport means identification name identifier	C an..9	**O**		
1131	Code list identification code	C an..17	**O**		
3055	Code list responsible agency code	C an..3	**D**		DE 3055 must be used if DE 8213 is used.
8212	Transport means identification name	C an..35	**R**		
8453	Transport means nationality	C an..3	**O**		

5. Segments Layout

Segment number: 18

		EDIFACT	GS1	*	Description
	code				
8281	Transport means ownership indicator code	C an..3	**N**		

Segment Notes:

This segment is used to identify the mode and means of transport which will be used to return the goods detailed in the message.

Example:
TDT+20++30+31+:::ACE EXPRESS'
The goods must be returned using a truck from the company ACE Express.

5. Segments Layout

Segment number: 19

SG11	- M	9999 -	LIN-PIA-IMD-MEA-DTM-QTY-LOC-MOA-SG12-SG13-SG16-SG18
LIN	- M	1 -	Line item

Function:

To identify a line item and configuration.

		EDIFACT	GS1	*	Description
1082	Line item identifier	C an..6	**R**		Application generated number of the item lines within the message.
1229	Action request/notification description code	C an..3	**N**		
C212	ITEM NUMBER IDENTIFICATION	C	**D**		This composite is only used for the identification of GS1 codes. If another coding structure is required, e. g., HIBC, this composite will not be used and the code will be detailed in the PIA segment.
7140	Item identifier	C an..35	**R**		Format n..14 GTIN - this is the number of the article for which instructions for return are being provided.
7143	Item type identification code	C an..3	**R**	*	SRV = GS1 Global Trade Item Number
1131	Code list identification code	C an..17	**N**		
3055	Code list responsible agency code	C an..3	**N**		
C829	SUB-LINE INFORMATION	C	**D**		
5495	Sub-line indicator code	C an..3	**R**	*	1 = Sub-line information
1082	Line item identifier	C an..6	**R**		
1222	Configuration level number	C n..2	**N**		
7083	Configuration operation code	C an..3	**N**		

Segment Notes:

This segment indicates the beginning of the detail section of the instruction for returns message.
If Global Trade Item Numbers are available it is mandatory to use GTIN within the LIN segment.
The detail section is formed by a repeating group of segments, always starting with a LIN segment.

Note on DE 1082:
Numbering rule: In Part I, section 4.10 there is the recommendation “Within EANCOM® it is recommended that the line numbers used in the first occurrence of data element 1082 in the LIN segment be sequential, starting at 1 for each new message.”

Note on DE 7140:
Only the following significant digits are possible:
- 8 digits for GTIN 8 codes
- 12 digits for GTIN 12 codes
- 13 digits for GTIN 13 codes
- 14 digits for GTIN 14 codes

Dependency Note:
C829 is only used when sub-lines are required.
FOR A COMPLETE DESCRIPTION ON THE USAGE OF SUB-LINES PLEASE REFER TO PART I, SECTION 4.10.

Example:
LIN+1++4000862141404:SRV'

5. Segments Layout

Segment number: 20

SG11	- M	9999 -	LIN-PIA-IMD-MEA-DTM-QTY-LOC-MOA-SG12-SG13-SG16-SG18
PIA	- C	9 -	Additional product id

Function:
To specify additional or substitutional item identification codes.

		EDIFACT	GS1	*	Description
4347	Product identifier code qualifier	M an..3	**M**	*	1 = Additional identification 5 = Product identification Product Id function coded has the following restricted coded functions: 1 - Additional Identification - To provide an additional identity for the product identified in the LIN segment. The additional identification can consist of : A supplemental identification which provides more information complementary to the GTIN provided in the LIN segment, e.g. a batch number, promotional variant number, product group number, etc. An alternative identification which may be used instead of the GTIN provided in the LIN segment, e.g. a buyers article number, an HIBC code, etc. 5 - Product Identification - To provide the primary product identification code when no GTIN has been provided in the LIN segment.
C212	ITEM NUMBER IDENTIFICATION	M	**M**		
7140	Item identifier	C an..35	**R**		
7143	Item type identification code	C an..3	**R**		PV = Promotional variant number HS = Harmonised system IN = Buyer's item number SA = Supplier's article number SRV = GS1 Global Trade Item Number
1131	Code list identification code	C an..17	**O**		
3055	Code list responsible agency code	C an..3	**D**		9 = GS1 91 = Assigned by supplier or supplier's agent 92 = Assigned by buyer or buyer's agent
C212	ITEM NUMBER IDENTIFICATION	C	**O**		
7140	Item identifier	C an..35	**R**		
7143	Item type identification code	C an..3	**R**		
1131	Code list identification code	C an..17	**O**		
3055	Code list responsible agency code	C an..3	**D**		
C212	ITEM NUMBER IDENTIFICATION	C	**O**		
7140	Item identifier	C an..35	**R**		
7143	Item type identification code	C an..3	**R**		
1131	Code list identification code	C an..17	**O**		
3055	Code list responsible agency code	C an..3	**D**		
C212	ITEM NUMBER IDENTIFICATION	C	**O**		

5. Segments Layout

Segment number: 20

		EDIFACT	GS1	*	Description
7140	Item identifier	C an..35	**R**		
7143	Item type identification code	C an..3	**R**		
1131	Code list identification code	C an..17	**O**		
3055	Code list responsible agency code	C an..3	**D**		
C212	ITEM NUMBER IDENTIFICATION	C	**O**		
7140	Item identifier	C an..35	**R**		
7143	Item type identification code	C an..3	**R**		
1131	Code list identification code	C an..17	**O**		
3055	Code list responsible agency code	C an..3	**D**		

Segment Notes:

This segment is used to specify additional or substitutional item identification codes such as a buyer's or supplier's item number.

Examples:
PIA+1+ABC5343:IN'
In this example the PIA segment is used to provide an additional identification to the GTIN provided in the LIN segment. The GTIN 4000862141404 provided in the LIN segment refers to the internal buyer's item number ABC5343.

PIA+5+2209953C001L:AC'
This example details the HIBC code 2209953C001L which is provided as the primary product code because no GTIN was provided in the LIN segment.

5. Segments Layout

Segment number: 21

SG11	- M	9999 -	LIN-PIA-IMD-MEA-DTM-QTY-LOC-MOA-SG12-SG13-SG16-SG18
IMD	- C	9 -	Item description

Function:

To describe an item in either an industry or free format.

		EDIFACT	GS1	*	Description
7077	Description format code	C an..3	**O**		B = Code and text C = Code (from industry code list) F = Free-form S = Structured (from industry code list)
C272	ITEM CHARACTERISTIC	C	**O**		
7081	Item characteristic code	C an..3	**R**		
1131	Code list identification code	C an..17	**O**		
3055	Code list responsible agency code	C an..3	**D**	*	9 = GS1 Must be used if DE7081 contains an GS1 Code.
C273	ITEM DESCRIPTION	C	**A**		
7009	Item description code	C an..17	**O**		CU = Consumer unit (GS1 Permanent Code) DU = Despatch unit (GS1 Permanent Code) TU = Traded unit (GS1 Permanent Code) VQ = Variable quantity product (GS1 Permanent Code)
1131	Code list identification code	C an..17	**O**		
3055	Code list responsible agency code	C an..3	**D**		9 = GS1 91 = Assigned by supplier or supplier's agent 92 = Assigned by buyer or buyer's agent
7008	Item description	C an..256	**O**		
7008	Item description	C an..256	**O**		
3453	Language name code	C an..3	**O**		
7383	Surface or layer code	C an..3	**N**		

Segment Notes:

This segment is used to describe the current line item.
It is recommended that this segment only be used for coded descriptions. Data element 7008 in clear text should only be used when no product code is available or when free-form descriptions are required by trading partners.
If you wish to indicate that promotional details are marked on the package, then this should be indicated in DE 7233 in the PAC segment.

Example:
IMD+C++TU::9'
IMD+F++:::CORN CRUNCHIES:CASE'

5. Segments Layout

Segment number: 22

SG11	- M	9999	-	LIN-PIA-IMD-MEA-DTM-QTY-LOC-MOA-SG12-SG13-SG16-SG18
MEA	- C	9	-	Measurements

Function:

To specify physical measurements, including dimension tolerances, weights and counts.

		EDIFACT	GS1	*	Description
6311	Measurement purpose code qualifier	M an..3	**M**		PD = Physical dimensions (product ordered)
C502	MEASUREMENT DETAILS	C	**A**		
6313	Measured attribute code	C an..3	**A**		AAA = Unit net weight AAB = Unit gross weight HT = Height dimension LN = Length dimension WD = Width dimension
6321	Measurement significance code	C an..3	**O**		3 = Approximately 4 = Equal to
6155	Non-discrete measurement name code	C an..17	**N**		
6154	Non-discrete measurement name	C an..70	**N**		
C174	VALUE/RANGE	C	**R**		
6411	Measurement unit code	M an..3	**M**		
6314	Measurement value	C an..18	**O**		
6162	Range minimum value	C n..18	**O**		
6152	Range maximum value	C n..18	**O**		
6432	Significant digits quantity	C n..2	**N**		
7383	Surface or layer code	C an..3	**N**		

Segment Notes:

This segment is used to specify any relevant measurements for the line item being returned.

Example:
Product with a length of 200 mm.
MEA+PD+LN+MMT:200'

5. Segments Layout

Segment number: 23

SG11	- M	9999	-	LIN-PIA-IMD-MEA-DTM-QTY-LOC-MOA-SG12-SG13-SG16-SG18
DTM	- C	9	-	Date/time/period

Function:

To specify date, and/or time, or period.

		EDIFACT	GS1	*	Description
C507	DATE/TIME/PERIOD	M	**M**		
2005	Date or time or period function code qualifier	M an..3	**M**		36 = Expiry date
2380	Date or time or period value	C an..35	**R**		
2379	Date or time or period format code	C an..3	**R**		102 = CCYYMMDD 203 = CCYYMMDDHHMM 718 = CCYYMMDD-CCYYMMDD

Segment Notes:

This segment is used to specify any dates applicable to the current line item only.

Example:
DTM+36:20020801:102'

5. Segments Layout

Segment number: 24

SG11	- M	9999	-	LIN-PIA-IMD-MEA-DTM-QTY-LOC-MOA-SG12-SG13-SG16-SG18
QTY	- C	9	-	Quantity

Function:

To specify a pertinent quantity.

		EDIFACT	GS1	*	Description
C186	QUANTITY DETAILS	M	**M**		
6063	Quantity type code qualifier	M an..3	**M**		61 = Return quantity
6060	Quantity	M an..35	**M**		
6411	Measurement unit code	C an..3	**D**		This DE is only used if the product being returned is of variable quantity.

Segment Notes:

This segment is used to specify any quantities relevant for the current line item.

Example:
QTY+61:40'

5. Segments Layout

Segment number: 25

SG11	- M	9999 -	LIN-PIA-IMD-MEA-DTM-QTY-LOC-MOA-SG12-SG13-SG16-SG18
LOC	- C	9 -	Place/location identification

Function:

To identify a place or a location and/or related locations.

		EDIFACT	GS1	*	Description
3227	Location function code qualifier	M an..3	**M**		14 = Location of goods 23E = Return location (GS1 Temporary Code) Code value '14' is used to indicate the place where the goods for return are located.
C517	LOCATION IDENTIFICATION	C	**R**		
3225	Location name code	C an..25	**A**		GLN - Format n13
1131	Code list identification code	C an..17	**O**		
3055	Code list responsible agency code	C an..3	**D**		9 = GS1 DE 3055 must be used if DE 3225 is used and does not contain an UN/LOCODE.
3224	Location name	C an..256	**O**		
C519	RELATED LOCATION ONE IDENTIFICATION	C	**N**		
3223	First related location name code	C an..25			
1131	Code list identification code	C an..17			
3055	Code list responsible agency code	C an..3			
3222	First related location name	C an..70			
C553	RELATED LOCATION TWO IDENTIFICATION	C	**N**		
3233	Second related location name code	C an..25			
1131	Code list identification code	C an..17			
3055	Code list responsible agency code	C an..3			
3232	Second related location name	C an..70			
5479	Relation code	C an..3	**N**		

Segment Notes:

This segment is used to identify locations relevant to the current line item.

Example:
LOC+14+5412345678908::9'

5. Segments Layout

Segment number: 26

SG11	- M	9999	-	LIN-PIA-IMD-MEA-DTM-QTY-LOC-MOA-SG12-SG13-SG16-SG18
MOA	- C	9	-	Monetary amount

Function:

To specify a monetary amount.

		EDIFACT	GS1	*	Description
C516	MONETARY AMOUNT	M	**M**		
5025	Monetary amount type code qualifier	M an..3	**M**		210 = Credit note amount
5004	Monetary amount	C n..35	**R**		
6345	Currency identification code	C an..3	**O**		ISO 4217 three alpha
6343	Currency type code qualifier	C an..3	**N**		
4405	Status description code	C an..3	**N**		

Segment Notes:

This segment is used to specify any monetary amount relevant to the current line item.

Example:
MOA+210:5800:EUR'
This example shows that the credit note amount for the current line item being returned is 5800 Euro.

5. Segments Layout

Segment number: 27

SG11	- M	9999 -	LIN-PIA-IMD-MEA-DTM-QTY-LOC-MOA-SG12-SG13-SG16-SG18
SG12	- C	9 -	DOC-DTM
DOC	- M	1 -	Document/message details

Function:

To identify documents and details directly related to it.

		EDIFACT	GS1	*	Description
C002	DOCUMENT/MESSAGE NAME	M	**M**		
1001	Document name code	C an..3	**R**		381 = Credit note - goods and services
1131	Code list identification code	C an..17	**O**		
3055	Code list responsible agency code	C an..3	**D**		
1000	Document name	C an..35	**N**		
C503	DOCUMENT/MESSAGE DETAILS	C	**O**		
1004	Document identifier	C an..35	**O**		
1373	Document status code	C an..3	**O**		4 = To arrive by separate EDI message 7 = To be raised and sent
1366	Document source description	C an..70	**O**		
3453	Language name code	C an..3	**O**		
1056	Version identifier	C an..9	**N**		
1060	Revision identifier	C an..6	**N**		
3153	Communication medium type code	C an..3	**N**		
1220	Document copies required quantity	C n..2	**N**		
1218	Document originals required quantity	C n..2	**N**		

Segment Notes:

This segment is used to identify any documents relevant to the current line item.

Example:
DOC+381+1552:7'

5. Segments Layout

Segment number: 28

SG11	- M	9999	-	LIN-PIA-IMD-MEA-DTM-QTY-LOC-MOA-SG12-SG13-SG16-SG18
SG12	- C	9	-	DOC-DTM
DTM	- C	9	-	Date/time/period

Function:

To specify date, and/or time, or period.

		EDIFACT	GS1	*	Description
C507	DATE/TIME/PERIOD	M	**M**		
2005	Date or time or period function code qualifier	M an..3	**M**	*	137 = Document/message date/time
2380	Date or time or period value	C an..35	**R**		
2379	Date or time or period format code	C an..3	**R**		102 = CCYYMMDD 203 = CCYYMMDDHHMM 718 = CCYYMMDD-CCYYMMDD

Segment Notes:

This segment is used to specify dates related to the document specified in the DOC segment.

Example:
DTM+137:20021210:102'

5. Segments Layout

Segment number: 29

SG11	- M	9999 -	LIN-PIA-IMD-MEA-DTM-QTY-LOC-MOA-SG12-SG13-SG16-SG18
SG13	- C	9 -	RFF-DTM
RFF	- M	1 -	Reference

Function:

To specify a reference.

		EDIFACT	GS1	*	Description
C506	REFERENCE	M	**M**		
1153	Reference code qualifier	M an..3	**M**		AAK = Despatch advice number ALQ = Returns notice number AXB = Instruction for returns number CT = Contract number IV = Invoice number
1154	Reference identifier	C an..70	**R**		
1156	Document line identifier	C an..6	**O**		
4000	Reference version identifier	C an..35	**N**		
1060	Revision identifier	C an..6	**N**		

Segment Notes:

This segment is used to specify any references valid for the current line item only.

Example:
RFF+ALQ:5221:11'

5. Segments Layout

Segment number: 30

SG11	- M	9999	-	LIN-PIA-IMD-MEA-DTM-QTY-LOC-MOA-SG12-SG13-SG16-SG18
SG13	- C	9	-	RFF-DTM
DTM	- C	9	-	Date/time/period

Function:

To specify date, and/or time, or period.

		EDIFACT	GS1	*	Description
C507	DATE/TIME/PERIOD	M	**M**		
2005	Date or time or period function code qualifier	M an..3	**M**	*	171 = Reference date/time
2380	Date or time or period value	C an..35	**R**		
2379	Date or time or period format code	C an..3	**R**		102 = CCYYMMDD

Segment Notes:

This segment is used to specify dates and times of the reference specified in the previous RFF segment.

Example:
DTM+171:20020802:102'

5. Segments Layout

Segment number: 31

SG11	- M	9999 -	LIN-PIA-IMD-MEA-DTM-QTY-LOC-MOA-SG12-SG13-SG16-SG18
SG16	- C	9 -	PAC-SG17
PAC	- M	1 -	Package

Function:

To describe the number and type of packages/physical units.

		EDIFACT	GS1	*	Description
7224	Package quantity	C n..8	**O**		
C531	PACKAGING DETAILS	C	**O**		
7075	Packaging level code	C an..3	**N**		
7233	Packaging related description code	C an..3	**O**		
7073	Packaging terms and conditions code	C an..3	**N**		
C202	PACKAGE TYPE	C	**R**		
7065	Package type description code	C an..17	**A**		09 = Returnable pallet (GS1 Temporary Code)
1131	Code list identification code	C an..17	**O**		
3055	Code list responsible agency code	C an..3	**D**		9 = GS1
7064	Type of packages	C an..35	**O**		
C402	PACKAGE TYPE IDENTIFICATION	C	**N**		
7077	Description format code	M an..3			
7064	Type of packages	M an..35			
7143	Item type identification code	C an..3			
7064	Type of packages	C an..35			
7143	Item type identification code	C an..3			
C532	RETURNABLE PACKAGE DETAILS	C	**N**		
8395	Returnable package freight payment responsibility code	C an..3			
8393	Returnable package load contents code	C an..3			

Segment Notes:

This segment is used to provide packaging information for the line item being returned.

Example:
PAC+++CR'

5. Segments Layout

Segment number: 32

SG11	- M	9999 -	LIN-PIA-IMD-MEA-DTM-QTY-LOC-MOA-SG12-SG13-SG16-SG18
SG16	- C	9 -	PAC-SG17
SG17	- C	9 -	PCI-DTM-GIN
PCI	- M	1 -	Package identification

Function:

To specify markings and labels on individual packages or physical units.

		EDIFACT	GS1	*	Description
4233	Marking instructions code	C an..3	**R**		14 = Mark expiry date 16 = Buyer's instructions 17 = Supplier's instructions 34E = Marked with GS1 number (GS1 Temporary Code) 39 = Marked with Serial Shipping Container Code (SSCC)
C210	MARKS & LABELS	C	**O**		
7102	Shipping marks description	M an..35	**M**		
7102	Shipping marks description	C an..35	**O**		
7102	Shipping marks description	C an..35	**O**		
7102	Shipping marks description	C an..35	**O**		
7102	Shipping marks description	C an..35	**O**		
7102	Shipping marks description	C an..35	**O**		
7102	Shipping marks description	C an..35	**O**		
7102	Shipping marks description	C an..35	**O**		
7102	Shipping marks description	C an..35	**O**		
7102	Shipping marks description	C an..35	**O**		
8275	Container or package contents indicator code	C an..3	**N**		
C827	TYPE OF MARKING	C	**N**		
7511	Marking type code	M an..3			
1131	Code list identification code	C an..17			
3055	Code list responsible agency code	C an..3			

Segment Notes:

This segment is used to provide markings and labels information relevant to the packaging unit identified in the PAC segment. This information may be used at the time of collection to correctly identify the packages for return.

Example:
PCI+17+FOR COLLECTION BY ACE EXPRESS - 30/:12/2002'

5. Segments Layout

Segment number: 33

SG11	- M	9999	-	LIN-PIA-IMD-MEA-DTM-QTY-LOC-MOA-SG12-SG13-SG16-SG18
SG16	- C	9	-	PAC-SG17
SG17	- C	9	-	PCI-DTM-GIN
DTM	- C	9	-	Date/time/period

Function:

To specify date, and/or time, or period.

		EDIFACT	GS1	*	Description
C507	DATE/TIME/PERIOD	M	**M**		
2005	Date or time or period function code qualifier	M an..3	**M**		36 = Expiry date
2380	Date or time or period value	C an..35	**R**		
2379	Date or time or period format code	C an..3	**R**		102 = CCYYMMDD 203 = CCYYMMDDHHMM

Segment Notes:

This segment is used to specify dates related to the packaging for the current line item.

Example:
DTM+36:20020901:102'

5. Segments Layout

Segment number: 34

SG11	- M	9999 -	LIN-PIA-IMD-MEA-DTM-QTY-LOC-MOA-SG12-SG13-SG16-SG18
SG16	- C	9 -	PAC-SG17
SG17	- C	9 -	PCI-DTM-GIN
GIN	- C	9 -	Goods identity number

Function:

To give specific identification numbers, either as single numbers or ranges.

		EDIFACT	GS1	*	Description
7405	Object identification code qualifier	M an..3	**M**	*	AW = Serial shipping container code BJ = Serial shipping container code SRV = GS1 Global Trade Item Number (GS1 Temporary Code)
C208	IDENTITY NUMBER RANGE	M	**M**		
7402	Object identifier	M an..35	**M**		
7402	Object identifier	C an..35	**O**		
C208	IDENTITY NUMBER RANGE	C	**O**		
7402	Object identifier	M an..35	**M**		
7402	Object identifier	C an..35	**O**		
C208	IDENTITY NUMBER RANGE	C	**O**		
7402	Object identifier	M an..35	**M**		
7402	Object identifier	C an..35	**O**		
C208	IDENTITY NUMBER RANGE	C	**O**		
7402	Object identifier	M an..35	**M**		
7402	Object identifier	C an..35	**O**		
C208	IDENTITY NUMBER RANGE	C	**O**		
7402	Object identifier	M an..35	**M**		
7402	Object identifier	C an..35	**O**		

Segment Notes:

This segment is used to provide identification numbers relevant to the packaging unit identified in the PAC segment.

Example:
GIN+AW+354123450000000014'

5. Segments Layout

Segment number: 35

SG11	- M	9999	-	LIN-PIA-IMD-MEA-DTM-QTY-LOC-MOA-SG12-SG13-SG16-SG18
SG18	- C	99	-	CDI-DTM-FTX
CDI	- M	1	-	Physical or logical state

Function:

To describe a physical or logical state.

		EDIFACT	GS1	*	Description
7001	Physical or logical state type code qualifier	M an..3	**M**		3E = Upon return (GS1 Temporary Code)
C564	PHYSICAL OR LOGICAL STATE INFORMATION	M	**M**		
7007	Physical or logical state description code	C an..3	**A**		12E = Return goods (GS1 Temporary Code) 13E = Dispose of goods (GS1 Temporary Code) 14E = Destroy goods (GS1 Temporary Code) 15E = Repair goods (GS1 Temporary Code) 16E = Hold for examination (GS1 Temporary Code) 17E = Return refused (GS1 Temporary Code)
1131	Code list identification code	C an..17	**O**		
3055	Code list responsible agency code	C an..3	**D**		9 = GS1
7006	Physical or logical state description	C an..70	**O**		

Segment Notes:

This segment is used to indicate conditions (actions) requested by the message sender for the current line item.

Example:
CDI+3E+13E::9'
Provides permission to dispose of the current line item.

5. Segments Layout

Segment number: 36

SG11	- M	9999 -	LIN-PIA-IMD-MEA-DTM-QTY-LOC-MOA-SG12-SG13-SG16-SG18
SG18	- C	99 -	CDI-DTM-FTX
DTM	- C	9 -	Date/time/period

Function:

To specify date, and/or time, or period.

		EDIFACT	GS1	*	Description
C507	DATE/TIME/PERIOD	M	**M**		
2005	Date or time or period function code qualifier	M an..3	**M**		200 = Pick-up/collection date/time of cargo 234 = Collection date/time, earliest 235 = Collection date/time, latest 557 = Returned date
2380	Date or time or period value	C an..35	**R**		
2379	Date or time or period format code	C an..3	**R**		102 = CCYYMMDD 203 = CCYYMMDDHHMM

Segment Notes:

This segment is used to specify dates relevant to the returns conditions and instructions provided in the CDI and INS segments for the current line item.

Example:
DTM+200:20020601:102'

5. Segments Layout

Segment number: 37

SG11	- M	9999 -	LIN-PIA-IMD-MEA-DTM-QTY-LOC-MOA-SG12-SG13-SG16-SG18
SG18	- C	99 -	CDI-DTM-FTX
FTX	- C	9 -	Free text

Function:

To provide free form or coded text information.

		EDIFACT	GS1	*	Description
4451	Text subject code qualifier	M an..3	**M**		AAI = General information BAL = Non-acceptance information BAM = Returns information
4453	Free text function code	C an..3	**O**		1 = Text for subsequent use
C107	TEXT REFERENCE	C	**D**		This composite is only used when trading partners have agreed to use mutually defined code values.
4441	Free text value code	M an..17	**M**		
1131	Code list identification code	C an..17	**O**		
3055	Code list responsible agency code	C an..3	**D**		9 = GS1 92 = Assigned by buyer or buyer's agent
C108	TEXT LITERAL	C	**D**		This composite is only used if coded text can not be used.
4440	Free text value	M an..512	**M**		
4440	Free text value	C an..512	**O**		
4440	Free text value	C an..512	**O**		
4440	Free text value	C an..512	**O**		
4440	Free text value	C an..512	**O**		
3453	Language name code	C an..3	**D**		ISO 639 two alpha code This data element is only used when non coded free text has been provided in data element C108.
4447	Free text format code	C an..3	**N**		

Segment Notes:

This segment is used to indicate free text information related to the conditions of the current line item.
Use of this segment in free form is not recommended since in most cases it inhibits automatic processing of the Instruction for Returns message.
Coded references to standard texts is an available functionality which enables automatic processing and reduces transmission and processing overheads. Standard texts should be mutually defined among trading partners and can be used to cover legal and other requirements.

Example:
FTX+RTI+1+001::92'
Standard text 001 = 'PLEASE ENSURE GOODS ARE DISPOSED OF IN CORRECT MANNER.'

5. Segments Layout

Segment number: 38

CNT - C 9 - Control total					
Function: To provide control total.					
		EDIFACT	GS1	*	Description
C270	CONTROL	M	**M**		
6069	Control total type code qualifier	M an..3	**M**	*	1 = Total value of the quantity segments at line level in a message 2 = Number of line items in message
6066	Control total value	M n..18	**M**		
6411	Measurement unit code	C an..3	**O**		
Segment Notes: This is used to provide message control information for checking on the message receivers in-house system. Example: CNT+2:120'					

5. Segments Layout

Segment number: 39

UNT - M 1 - Message trailer

Function:

To end and check the completeness of a message.

Notes:
1. 0062, the value shall be identical to the value in 0062 in the corresponding UNH segment.

		EDIFACT	GS1	*	Description
0074	Number of segments in a message	M n..10	**M**		The total number of segments in the message is detailed here.
0062	Message reference number	M an..14	**M**		The message reference numbered detailed here should equal the one specified in the UNH segment.

Segment Notes:

The UNT segment is a mandatory UN/EDIFACT segment. It must always be the last segment in the message.

Example:
UNT+40+ME000001'

5. Segments Layout

Segment number: 40

UNZ - M 1 - Interchange trailer					
Function: To end and check the completeness of an interchange. Notes: 1. 0020, the value shall be identical to the value in 0020 in the corresponding UNB segment.					
		EDIFACT	GS1	*	Description
0036	Interchange control count	M n..6	**M**		Number of messages or functional groups within an interchange.
0020	Interchange control reference	M an..14	**M**		Identical to DE 0020 in UNB segment.
Segment Notes: This segment is used to provide the trailer of an interchange. DE 0036: If functional groups are used, this is the number of functional groups within the interchange. If functional groups are not used, this is the number of messages within the interchange. UNZ+5+12345555'					

6. Examples

Example 1

The following is an example of a simple instruction for returns for one line item between a supplier identified by GLN 4012345500004 and a buyer identified by GLN 5412345000013 . The message which was sent on the 4th of September 2002 and has the reference 481, relates to a delivery dated 14th of July and identified by the delivery note number ACX-8552, and an announcement for returns message sent the 30th of August 2002 with the reference 1276.

The supplier indicates that the credit note 600122 will be raised and sent on the 28th of September 2002.

The supplier reports that the return of 48 units of the product identified by GTIN 4000862141404 which are at the buyers location identified by GLN 5412345678908 has been accepted.

The buyer is requested to have the goods returned by the 8th of September 2002.

UNH+ME000001+RETINS:D:01B:UN:EAN003'	Message header
BGM+71E::9+481+9'	Instruction for returns number 481
DTM+137:20020904:102'	Message date 4th of September 2002
DOC+381+600122:7'	Indicates that credit note number 600122 will be raised and sent
DTM+137:20020928:102'	Credit note will be dated the 28th of September 2002
RFF+DQ:ACX-8552'	Returns instructions relates to delivery note number ACX-8552
DTM+171:20020714:102'	Delivery note issued on the 14th of July 2002
RFF+ARN:1276'	Instruction for returned relates to the announcement for returns number 1276
DTM+171:20020830:102'	Announcement for returns created on 30th of August 2002
NAD+SU+4012345500004::9'	Supplier identified by GLN 4012345500004
NAD+BY+5412345000013::9'	Buyer identified by GLN 5412345000013
LOC+14+5412345678908::9'	Location of goods identified by GLN 5412345678908
CDI+3E+12E::9'	Goods should be returned
DTM+557:20020908:102'	Return by date 8th of September 2002
LIN+1++4000862141404:SRV'	Product being instructed for return identified by GTIN 4000862141404
QTY+61:48'	Return quantity equals 48 units
CNT+2:1'	Count of the number of LIN segments in the message
UNT+18+ME000001'	Total number of segments in the message equals 19

Example 2

The following is an example of an instruction for returns for items between a supplier identified by GLN 4012345500004 and a buyer identified by GLN

5412345000013 . The message which was sent on the 4th of November 2002 and has the reference 9662, relates to a delivery note made on the 1st of November and identified by the delivery note number SEW-3252, and an announcement for returns message sent the 2nd of November 2002 with the reference A-976.

The supplier indicates that the credit note H-022 will be raised and sent on the 15th of November 2002.

The supplier reports that the return of 48 units of the product identified by GTIN 4000862141404 has not been accepted. The reason for non-acceptance is stated as being that an order number for the goods exists on the suppliers system.

The return of 20 units of the product identified by GTIN 5412345666660 is approved and the buyer is asked to use the service of the transport company ABC Express and to have the goods ready for collection on the 10th of November 2002. The buyer is asked to dispose of 6 units of the final product identified by GTIN 5055555111119.

UNH+ME000001+RETINS:D:01B:UN:EAN003 '	Message header
BGM+71E::9+9662+9'	Instruction for returns number 9662
DTM+137:20021104:102'	message date 4th of November 2002
DOC+381+H-022:4'	Indicates that credit note number H-022 will be sent in a separate EDI message
DTM+137:20021115:102'	Credit note will be dated the 15th of November 2002
RFF+DQ:SEW-3252'	Returns instructions relates to delivery note numberSEW-3252
DTM+171:20021101:102'	Delivery note issued on the 1st of November 2002
RFF+ARN:A-976'	Instruction for returned relates to the announcement for returns number
	A-976
DTM+171:20021102:102'	Announcement for returns created on 2nd of November 2002
NAD+SU+4012345500004::9'	Supplier identified by GLN 4012345500004
NAD+BY+5412345000013::9'	Buyer identified by GLN 5412345000013
LOC+14+5412345678908::9'	Location of goods identified by GLN
	5412345678908
TDT+20++30++:::ABC EXPRESS'	The transported ABC Express must be used for the return
LIN+1++4000862141404:SRV'	First product being instructed for return identified by GTIN 4000862141404
QTY+61:48'	Return quantity equals 48 units
CDI+3E+17E::9'	Return of goods refused
FTX+NAI+++SEE ORDER NUMBER 2231'	Because the order number 2231 exists for their supply
LIN+2++5412345666660:SRV'	Second product being instructed for return identified by GTIN 5412345666660

6. Examples

QTY+61:20'	Return quantity equals 20 units
CDI+3E+12E::9'	Return is approved
DTM+200:20021110:102'	Ready for collection on the 10th of November 2002
LIN+3++5055555111119:SRV'	Third product being instructed for return identified by GTIN 5055555111119
QTY+61:6'	Return quantity equals 6 units
CDI+3E:13E::9'	Do not return, dispose of goods
CNT+2:3'	Count of the number of LIN segments in the message
UNT+26+ME000001'	Total number of segments in the message equals 27

Note:
The EDI interchange will include the UNB..UNZ segments and, if applicable, the UNG..UNE segments. (see Part I, section 5.7)